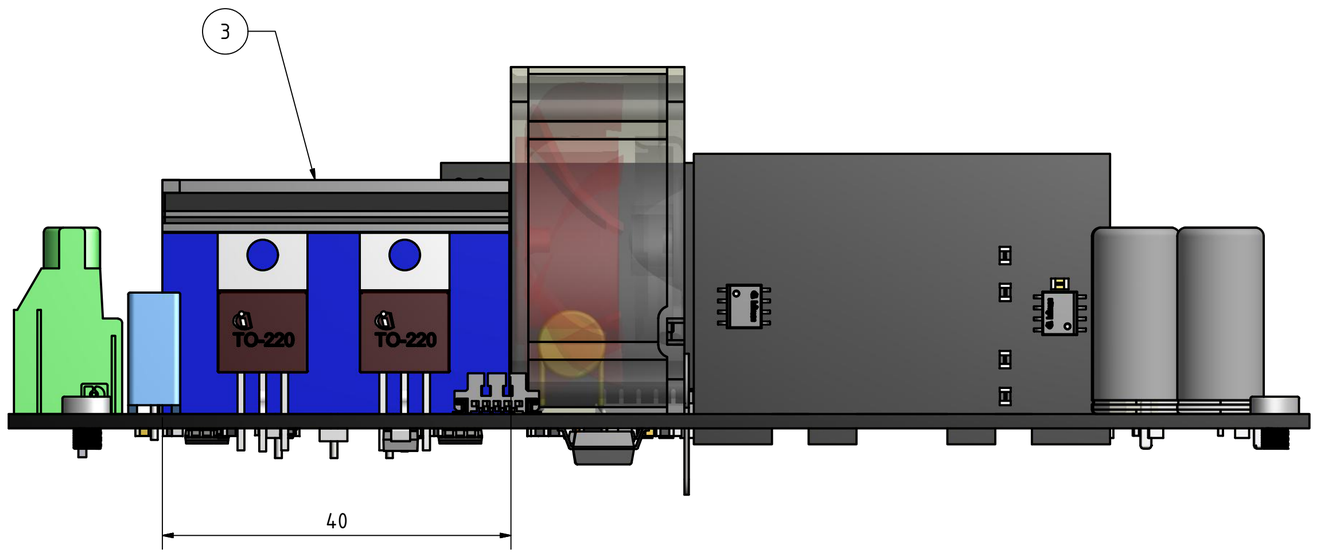

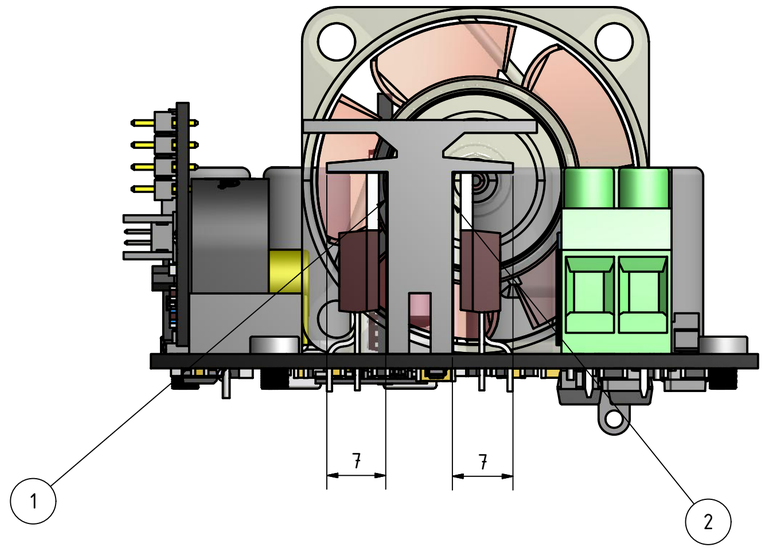

Thermal Interface Material:
Bergquist Sil-Pad K-10
covering the COMPLETE surface of the Heatsink (also on the top)!

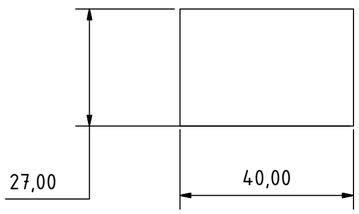

TABELLE			
Position	Spalte 2	PartNr	Number
1	Thermal Interface	Bergquist Sil-Pad K10	1
2	Thermal Interface	Bergquist Sil-Pad K10	1
3	Heatsink	AAVIID 0S529	1
not shown	Heatsink Clip	MAX09NG	4

	Datum	Name
Gezeichnet	12.09.2017	schmoelb
Kontrolliert		
Norm		

Status	Änderungen	Datum	Name

IS10000340 EVAL_1k4W_ZVS_FB

A2